Istosmerno pojačalo

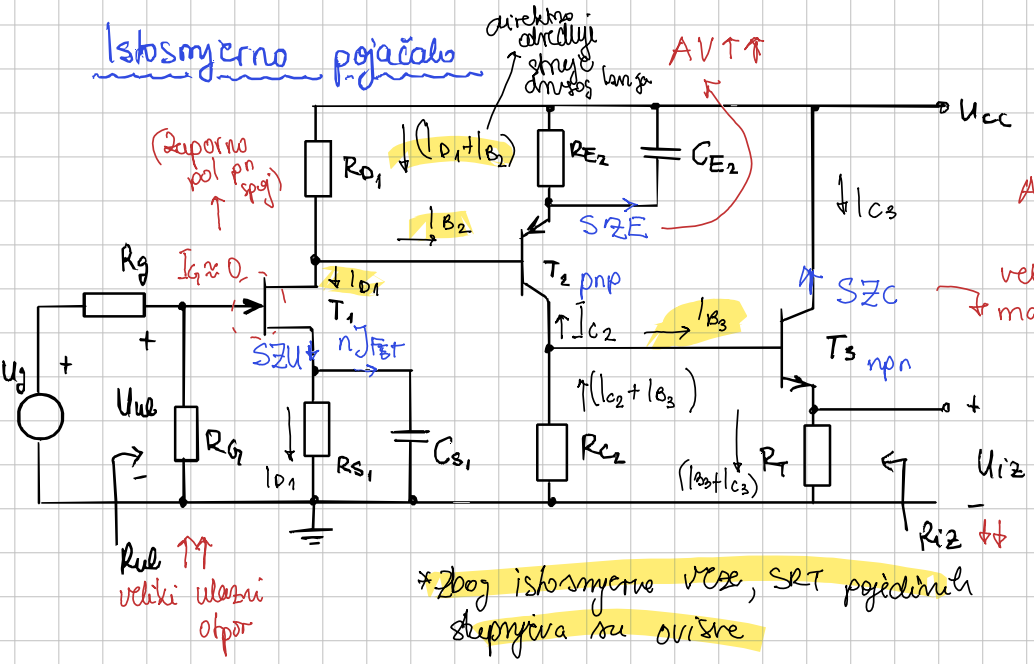

*Zbog istosmerne veze, SRT pojedinih stepenica su ovisne

Statika

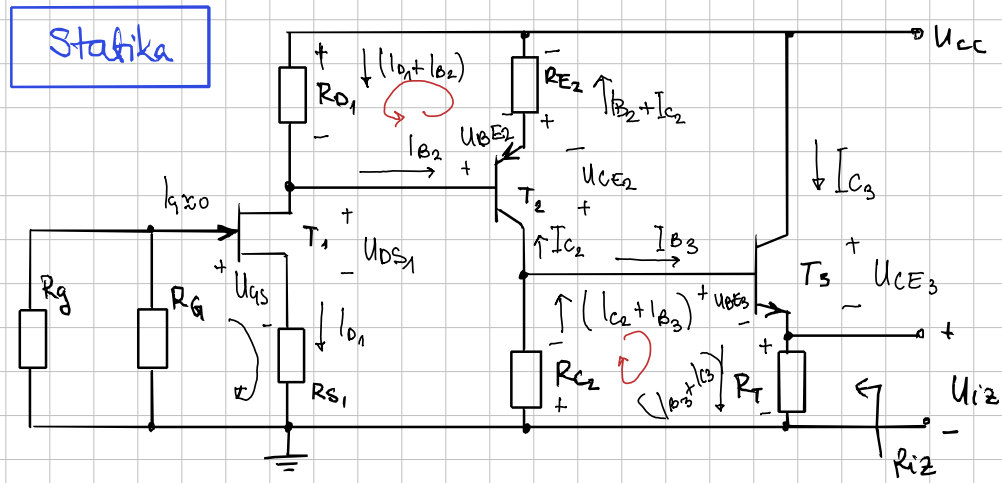

$$I_{D_1}\cdot R_S + U_{GS} = 0$$

(JFET) $$I_{D_1} = I_{DSS}\cdot\left(1-\frac{U_{GS}}{U_P}\right)^2$$

$$(I_{B_2}+I_{C_2})\cdot R_{E_2} + \underset{U_\gamma}{U_{BE_2}} + (I_{D_1}+I_{B_2})R_{D_1} = 0$$

$I_{C_2} \to \beta\cdot I_{B_2}$

$$(I_{B_3}+I_{C_3})R_T + \underset{U_\gamma}{U_{BE_3}} + (I_{C_2}+I_{B_3})\cdot R_{C_2} = 0$$

$I_{C_3} \to \beta\cdot I_{B_3}$

$$I_{B_2}(1+\beta)R_{E_2} + I_{B_2}\cdot R_{D_1} = -U_{BE_2} - I_{D_1}\cdot R_{D_1}$$

$$I_{B_2}\left[(1+\beta)R_{E_2} + R_{D_1}\right] = -(U_{BE_2} + I_{D_1}\cdot R_{D_1})$$

$$\Rightarrow I_{B_2} = -\frac{U_{BE_2} + I_{D_1}\cdot R_{D_1}}{R_{D_1} + (1+\beta)R_{E_2}}$$ ← 0...pnp

$$I_{BC_3}\left[(1+\beta)R_T + R_{C_2}\right] = -U_{BE_3} - I_{C_2}\cdot R_{C_2}$$

$$I_{BC_3} = -\frac{U_{BE_3} + I_{C_2}\cdot R_{C_2}}{(1+\beta)R_T + R_{C_2}}$$

$$-U_{CC} + R_{D_1}(I_{D_1}+I_{B_2}) + U_{DSQ_1} + I_{D_1}\cdot R_{S_1} = 0$$

$$U_{DSQ_1} = U_{CC} - I_{D_1}(R_{D_1}+R_{S_1}) - \cancel{R_{D_1}\cdot I_{B_2}}$$

zanemariva struja pored I_{D_1}

$$-U_{CC} - (I_{B_2}+I_{C_2})\cdot R_{E_2} - U_{CE_2} - R_{C_2}(I_{C_2}+I_{B_3}) = 0$$

$$U_{CE_2} = -U_{CC} - I_{B_2}(1+\beta)R_{E_2} - I_{B_2}\cdot\beta\cdot R_{C_2} - R_{C_2}\cdot I_{B_3}$$

$$U_{CEQ_2} = -U_{CC} - I_{B_2}\left[(1+\beta)R_{E_2} + \beta\cdot R_{C_2}\right] - \cancel{R_{C_2}\cdot I_{B_3}}$$

zanemariva

$|U_{CEQ_3}| > |U_{BEQ_2}|$ ... NAP

$$-U_{CC} + U_{CE_3} + R_T(I_{B_3}+I_{C_3}) = 0$$

$$U_{CE_3} = U_{CC} - I_{B_3}(1+\beta)R_T$$ - - - - > U_{BEQ_3} ... NAP

Primjer 3.3)

BipT:
$\beta = 100$, $U_\gamma = 0.7V$

$U_{CC} = 15V$ $\quad R_g = 1k\Omega$ $\quad R_G = 1M\Omega$

parametri JFETA:

$R_{D_1} = 1k\Omega$ $\quad R_{E_2} = 500\Omega$

$I_{DSS} = 10mA$

$R_{S_1} = 300\Omega$ $\quad R_{C_2} = R_T = 2k\Omega$

$U_P = -2V$

$I_{B_2} = ?$ $\quad I_{B_3} = ?$ $\quad U_{DS_1} = ?$ $\quad U_{CE_2} = ?$ $\quad U_{CE_3} = ?$

$$I_{B_2} = -\frac{U_{BE_2} + I_{D_1} \cdot R_D}{R_{D_1} + (1+\beta) R_{E_2}} \longrightarrow I_{D_1} = I_{DSS}\left(1 - \frac{U_{GS}}{U_P}\right)^2$$

$$I_{B_3} = -\frac{U_{BE_3} + I_{C_2} \cdot R_{C_2}}{(1+\beta) R_T + R_{C_2}}$$

$$I_{D_1} \cdot R_S + U_{GS} = 0$$
$$\longrightarrow U_{GS} = -I_{D_1} \cdot R_S$$

$$U_{DS_1} = U_{CC} - I_{D_1}(R_{D_1} + R_{S_1})$$

$$U_{CE_2} = -U_{CC} - I_{B_2}\left[(1+\beta) R_{E_2} + \beta \cdot R_{C_2}\right]$$

$$U_{CE_3} = U_{CC} - I_{B_3} \cdot (1+\beta) R_T$$

$$I_{D_1} = I_{DSS}\left(1 + \frac{I_{D_1} \cdot R_S}{U_P}\right)^2 = I_{DSS}\left(1 + 2\frac{I_{D_1} R_S}{U_P} + \left(\frac{I_{D_1} R_S}{U_P}\right)^2\right)$$

$$I_{DSS} + 2 \cdot \frac{I_{DSS} R_S}{U_P} \cdot I_{D_1} - I_{D_1} + \frac{I_{DSS} \cdot R_S^2}{U_P^2} \cdot I_{D_1}^2 = 0$$

$$I_{D_1} \frac{I_{DSS} \cdot R_S^2}{U_P^2} + I_{D_1}\left(2\frac{I_{DSS} \cdot R_S}{U_P} - 1\right) + I_{DSS} = 0$$

$$I_{D_1} \frac{R_S^2}{U_P^2} + I_{D_1}\left(2\frac{R_S}{U_P} - \frac{1}{I_{DSS}}\right) + 1 = 0$$

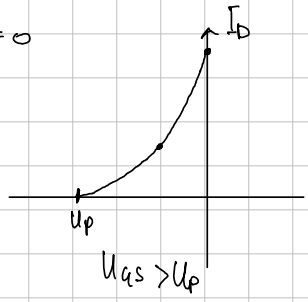

$\ldots \rightarrow I_{D_1} = 0.0148\ A \longrightarrow U_{GS} = \cancel{-0.44V}$

$I_{D_1} = 0.003\ A \longrightarrow U_{GS} = -0.9$

$\Rightarrow \boxed{I_{B_2} = -71.84\ \mu A}$ $\qquad \Rightarrow \boxed{I_{B_3} = 67.46\ \mu A}$

$\Rightarrow \boxed{I_{C_2} = -7.18\ mA}$ $\qquad \Rightarrow \boxed{I_{C_3} = 6.75\ mA}$

$\boxed{U_{DS_1} = 11.1V}$ $\quad \boxed{U_{CE_2} = 3.25V}$ $\quad \boxed{U_{CE_3} = 1.37V}$

Dinamika

r_{d1}, r_{ce2}, r_{ce3} su zanemarivi $\to \infty$

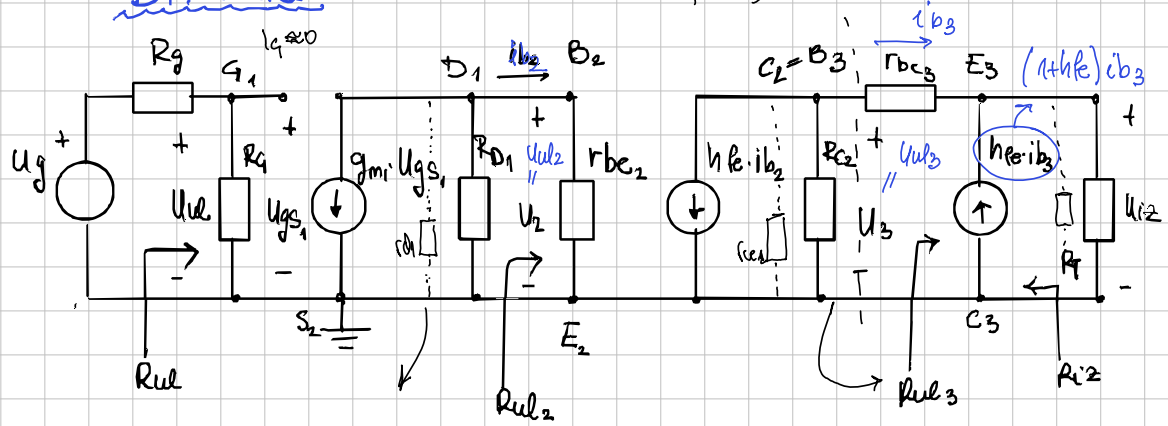

*krećemo od analize zadnjeg stupnja

$$A_{v3} = \frac{U_{iz}}{U_{ul3}} = \frac{U_{iz}}{i_{b3}} \cdot \frac{i_{b3}}{U_{ul3}}$$

$$U_{iz} = (1+h_{fe})\, i_{b3} \cdot R_T$$

$$U_{ul3} = i_{b3} \cdot r_{be3} + U_{iz} = i_{b3}\left(r_{be3} + (1+h_{fe}) R_T\right)$$

$$A_{v3} = (1+h_{fe}) R_T \cdot \frac{1}{r_{be3} + (1+h_{fe}) R_T}$$

$\to$ naponsko djelilo

< 1

≈ 1

$$R_{ul3} = \frac{U_{ul3}}{i_{b3}} = r_{be3} + (1+h_{fe}) \cdot R_T$$

$$A_{v2} = \frac{U_{ul3}}{U_{ul2}} = \frac{U_{ul3}}{i_{b2}} \cdot \frac{i_{b2}}{U_{ul2}}$$

$$U_{ul3} = -h_{fe} \cdot i_{b2} \left(R_{c2} \parallel R_{ul3}\right)$$

$$U_{ul2} = i_{b2} \cdot r_{be2}$$

$$A_{v2} = \frac{-h_{fe}}{r_{be2}} \left(R_{c2} \parallel R_{ul3}\right)$$

$$R_{ul2} = \frac{U_{ul2}}{i_{b2}} = r_{be2}$$

$$A_{v1} = \frac{U_{ul2}}{U_{ul}} = \frac{U_{ul2}}{U_{gs1}} \cdot \frac{U_{gs1}}{U_{ul}}$$

$$U_{ul2} = -g_m \cdot U_{gs1} \left(R_{D1} \parallel R_{ul2}\right)$$

$$U_{ul} = U_{gs1}$$

$$A_{v1} = -g_m \left(R_{D1} \parallel R_{ul2}\right)$$

$$R_{ul1} = R_G$$

$$\boxed{A_v = A_{v1} \cdot A_{v2} \cdot A_{v3}}$$

$R_{iz} \to U_g$ gasimo, umjesto R_T naponski izvor U ... sve kao inače

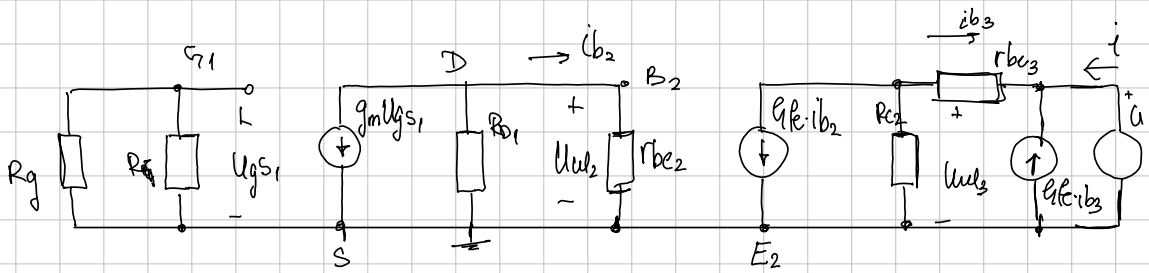

$$R_{iz} = \frac{U}{i} \qquad U = -i_{b_3}(r_{be_3} + R_{C_2}) \qquad i = -i_{b_3}(1 + h_{fe})$$

$$\Rightarrow R_{iz} = \frac{r_{be_3} + R_{C_2}}{1 + h_{fe}}$$

mali izlazni otpor

→ to je dobro kod naponskih pojačala

Primjer: $A_v = \frac{U_{iz}}{U_{ul}}$, R_{ul}, R_{iz} =? $\quad h_{fe} = 100 \quad U_T = 25\,mV$

$$A_{v_3} = (1 + h_{fe}) R_T \cdot \frac{1}{r_{be_3} + (1 + h_{fe}) R_T} \qquad R_{ul_3} = \frac{U_{ul_3}}{i_{b_3}} = r_{be_3} + (1 + h_{fe}) \cdot R_T$$

$$A_{v_2} = \frac{-h_{fe}}{r_{be_2}} (R_{C_2} \| R_{ul_3}) \qquad R_{ul_2} = \frac{U_{ul_2}}{i_{b_2}} = r_{be_2}$$

$$A_{v_1} = -g_m (R_{D_1} \| R_{ul_2}) \qquad R_{ul_1} = R_G \qquad R_{iz} = \frac{r_{be_3} + R_{C_2}}{1 + h_{fe_3}}$$

→ dinamički parametri

$$g_{m_1} = \left.\frac{\partial i_D}{\partial U_{GS}}\right|_{U_{DS} = konst} \rightarrow = -2 \frac{I_{DSS}}{U_P} \left(1 - \frac{U_{GSQ1}}{U_P}\right) = 5.49\ mA/V$$

$$r_{be_2} = \frac{U_T}{I_{BQ_2}} = 348\,\Omega \qquad r_{be_3} = 370.6\,\Omega$$

$A_{v_3} = 0.998$ $\quad A_{v_2} = -285.94$ $\quad A_{v_1} = -1.217$ $\quad \boxed{A_v = 404.45}$

$R_{ul_3} = 202.37\,k\Omega$ $\quad R_{ul_2} = 348\,\Omega$ $\quad R_{ul} = 1\,M\Omega$

$R_{iz} = 23.47\,\Omega$